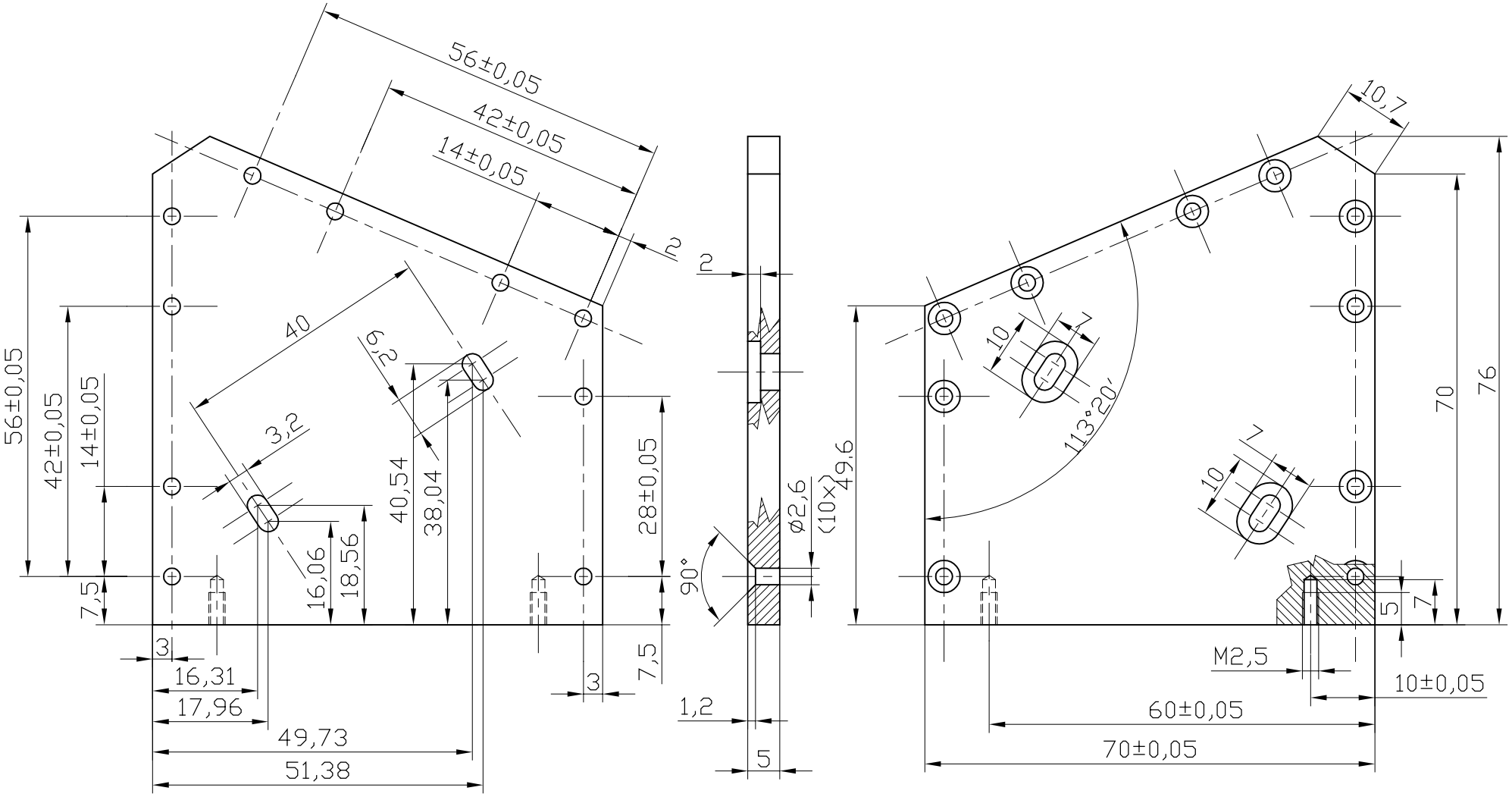

RIGHT COVER PLATE1	2015/01/03
Material: 6060 Black anodized	